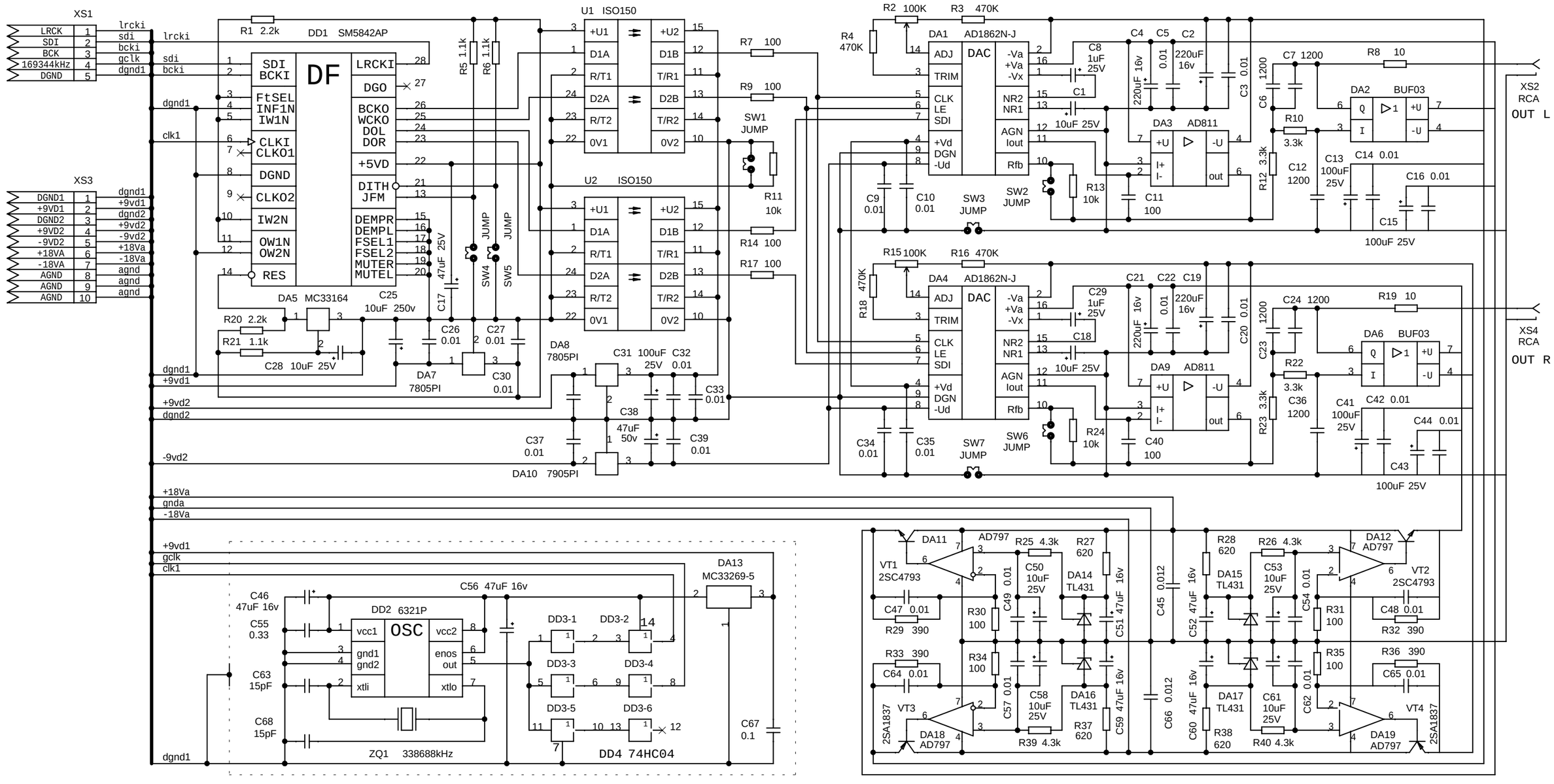

8x oversampling DAC "LYNX 7"