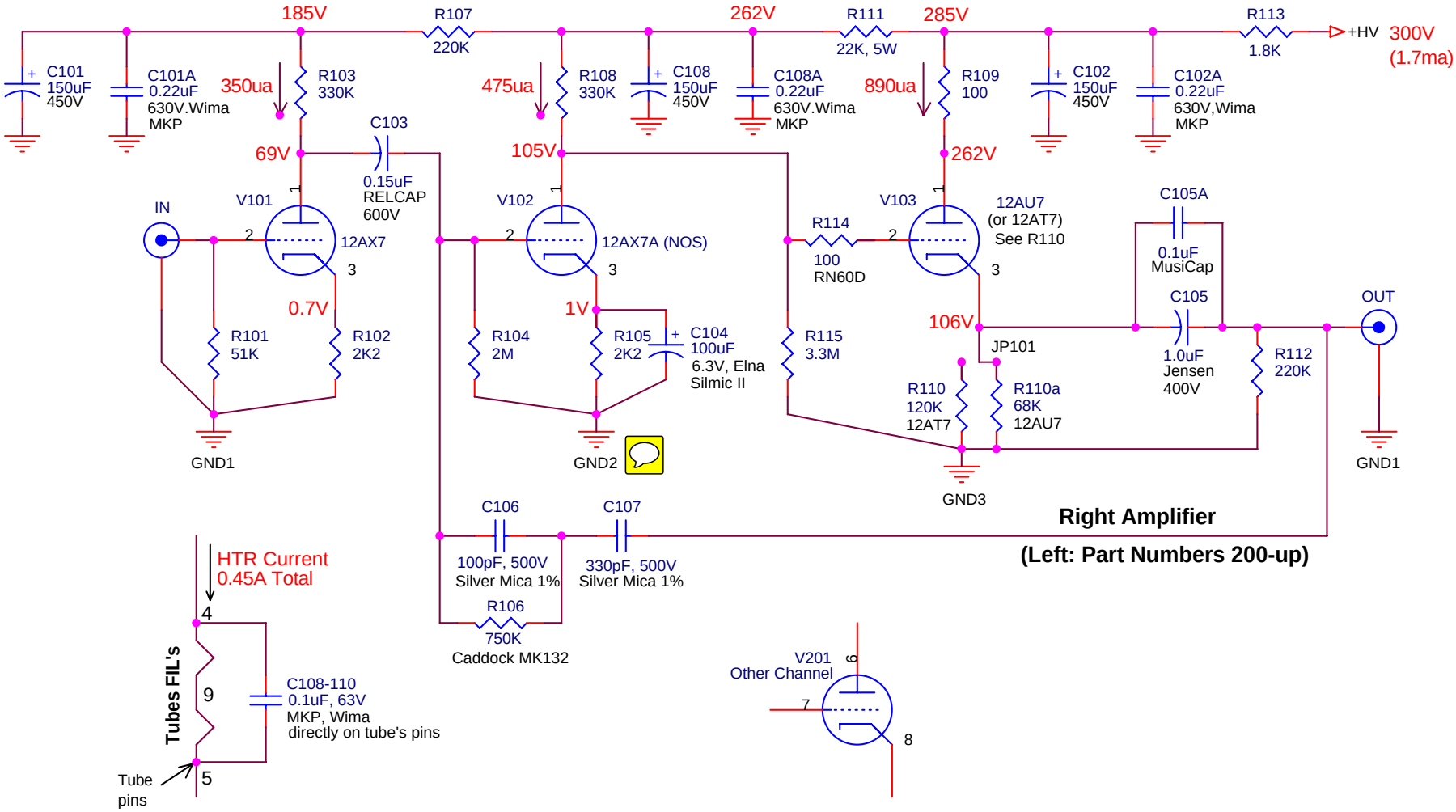

Notes:
1- All resistors Carbon Film, 1%, 1W, otherwise noted
2- All capacitors electrolytic, otherwise noted

Liste des révisions	
No	Description
1	
2	
3	
4	

EAR Yoshino - Thorsten Mods		
Title: EAR834P Phono Preamp		
Size: A	Document Number: Preamp Section	Rev: 2.0
Date: Monday, October 27, 2008	Sheet 1 of 2	